JH

Jhu Heng Enterprise Co., LTD



JH-175A/175S/1110A /1110S/1135A

Performance & Operation Instructions

I. JH-3HP Performance Spec：

- Motor Spec ：3HP(2.2kw)
- Spindle Speed ：2400 ~ 2950rpm
- Weight ：90kg

JH-5HP

- Motor Spec ：5HP(4kw)
- Spindle Speed ：1700 ~ 2100rpm
- Weight ：140kg

JH-7.5HP

- Motor Spec ：7.5HP(5.5kw)
- Spindle Speed ：1700 ~ 2100rpm
- Weight ：157kg

JH-10HP

- Motor Spec ：10HP(7 .5kw)
- Spindle Speed ：1500 ~ 1800rpm
- Weight ：175kg

JH-15HP

- Motor Spec ：10HP(11kw)
- Spindle Speed ：1500 ~ 1800rpm
- Weight ：190kg

Common Specifications：

- Swing Over Cross Slide ：>440 (mm)
- Voltage Values ：220V / 380V / 415V / 440V / 460V
- Vibration ：<3 μ m
- Working temperature ：5~40°C / Relative humidity (< 80%)
- Power Spec ：Three-phase/ three -wire system
- Grinding species ：steel, iron, copper, aluminum, cast iron, rubber, porcelain, marble...and other work pieces

Performance & Operation Instructions

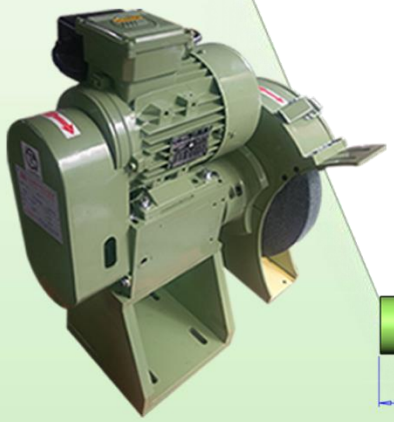

3HP

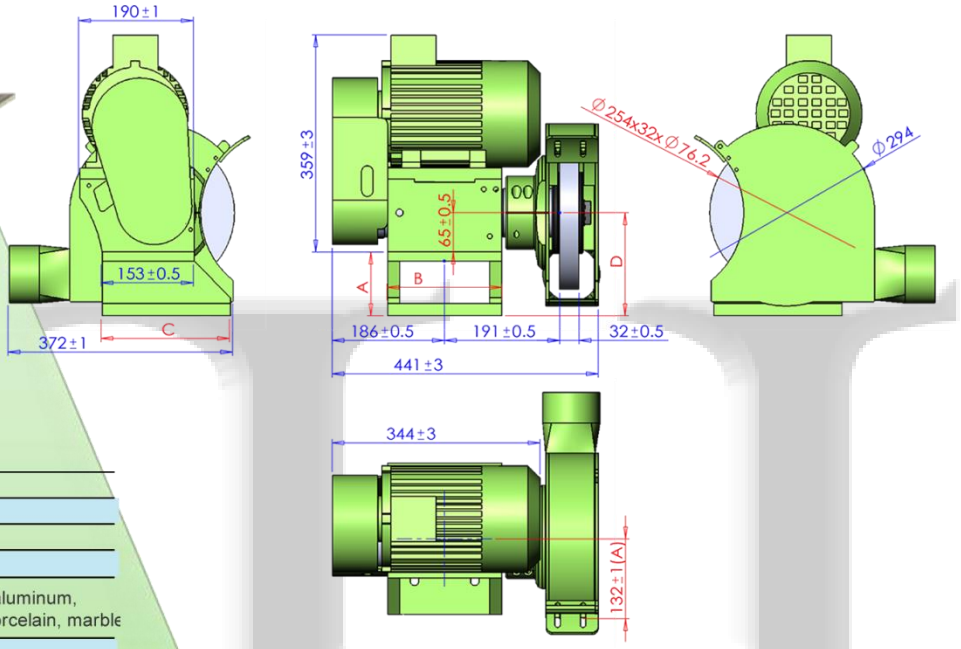

Motor Spec	3HP (2.2 KW)
Dimension of Grinding Wheel	10(in)
Spindle Speeds	2400(RPM)
Voltage Values	220/380/415(V)
Grinding species	Steel, iron, copper, aluminum, cast iron, rubber, porcelain, marble
Vibration	<3um
Weight	90Kg



5HP

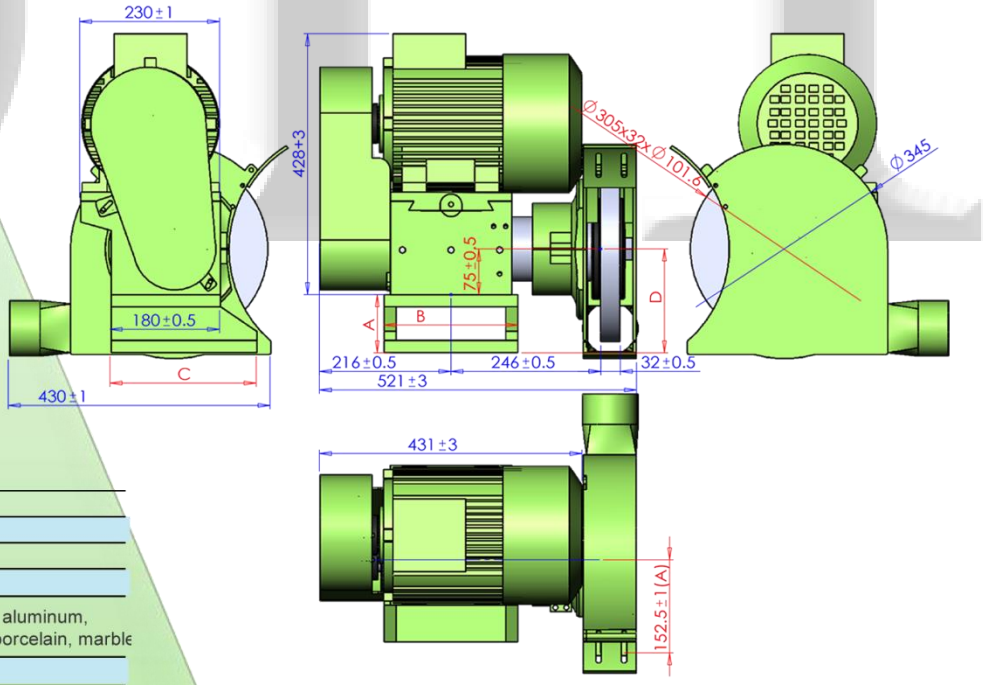

Motor Spec	5HP (4 KW)
Dimension of Grinding Wheel	12(in)
Spindle Speeds	1900(RPM)
Voltage Values	220/380/415(V)
Grinding species	Steel, iron, copper, aluminum, cast iron, rubber, porcelain, marble
Vibration	<3um
Weight	140Kg



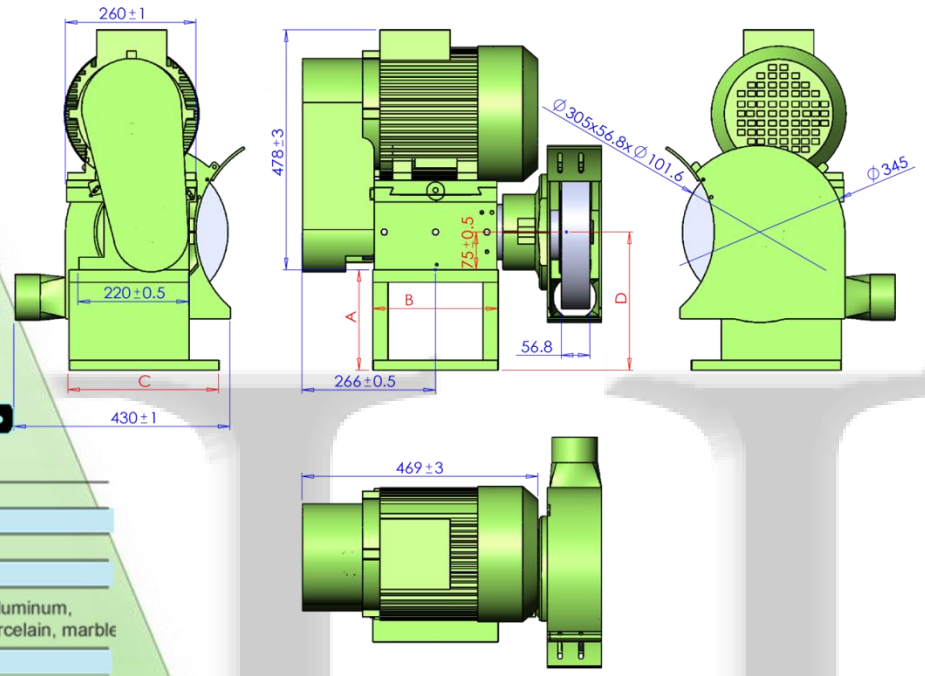

7.5HP

Motor Spec	7.5HP (5.5 KW)
Dimension of Grinding Wheel	14(in)
Spindle Speeds	1700(RPM)
Voltage Values	220/380/415(V)
Grinding species	Steel, iron, copper, aluminum, cast iron, rubber, porcelain, marble
Vibration	<3um
Weight	157Kg

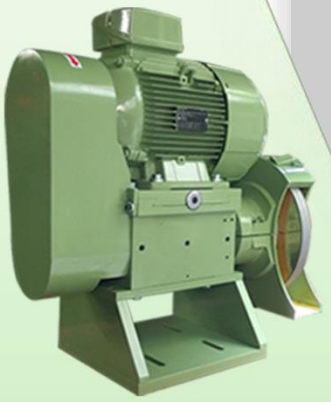

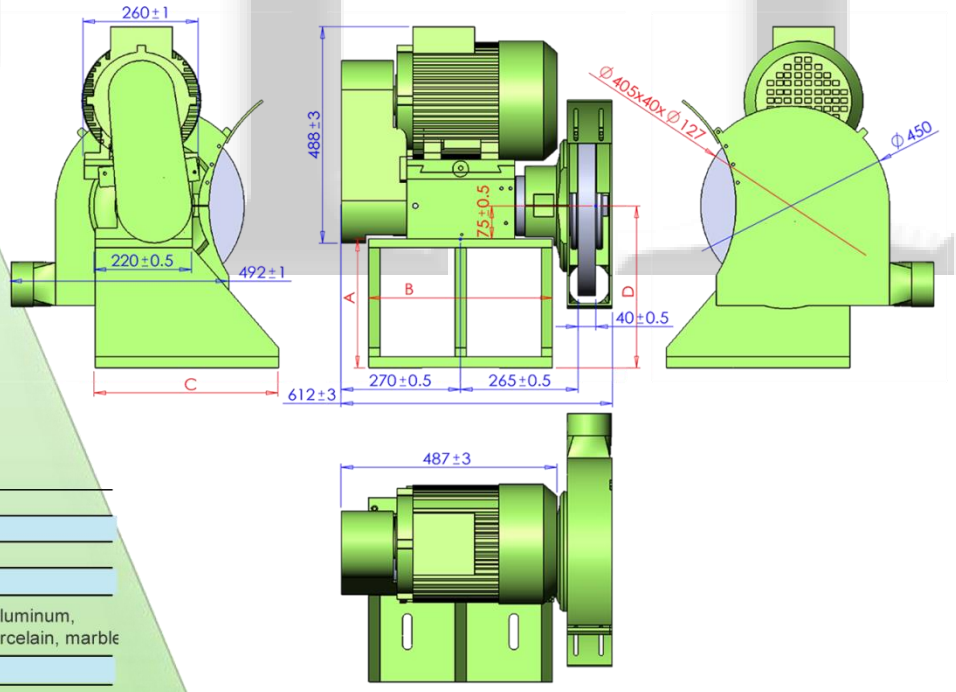

10HP

Motor Spec	10HP (7.5 KW)
Dimension of Grinding Wheel	16(in)
Spindle Speeds	1500(RPM)
Voltage Values	220/380/415(V)
Grinding species	Steel, iron, copper, aluminum, cast iron, rubber, porcelain, marble
Vibration	<3um
Weight	175Kg

II. JH-3HP /5HP/7.5HP/10HP/15HP Installation & Operation：

一、 Installation Notes

1. Remove the transverse feed platform of lathe, and cleanse the longitudinal feed thoroughly.

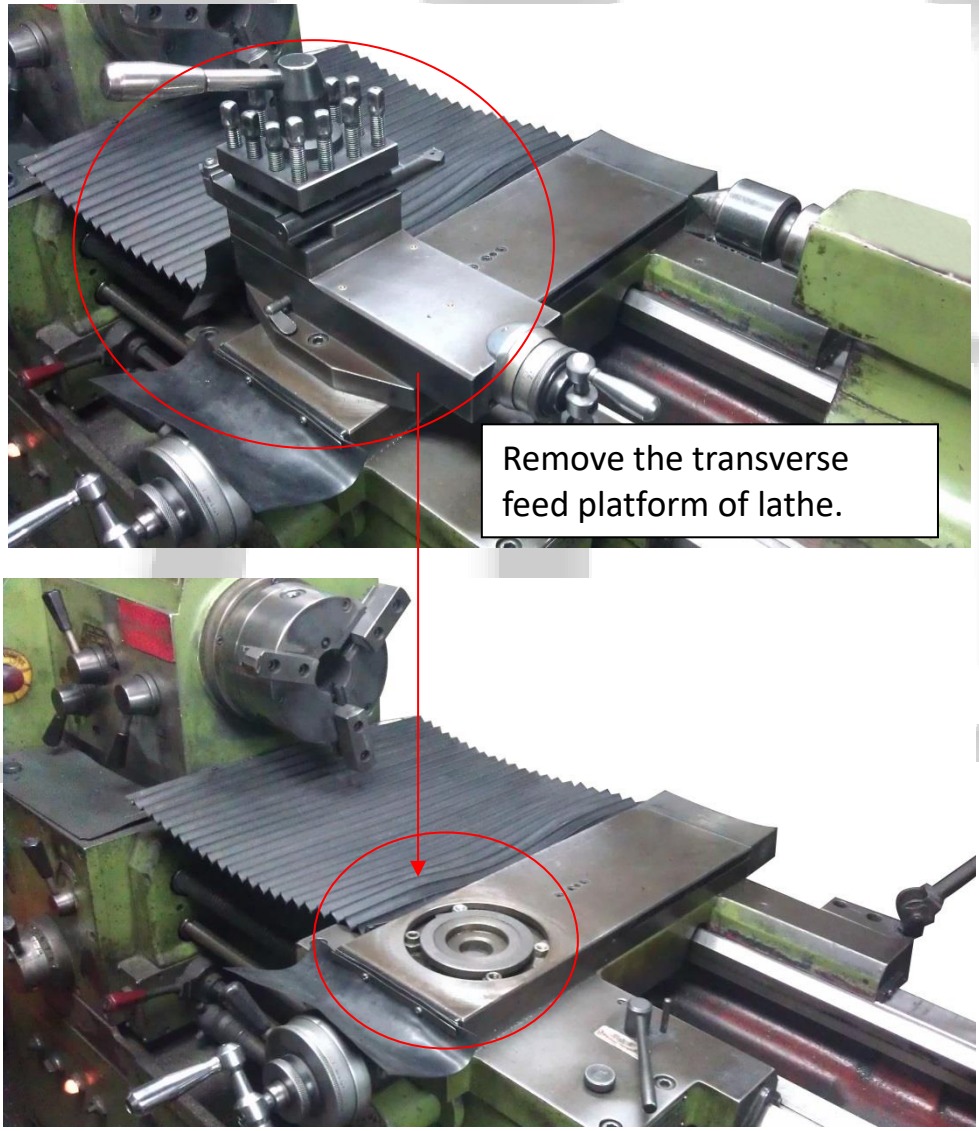

2. Elevate the grinder with a baseplate, and fix it on the longitudinal feed.

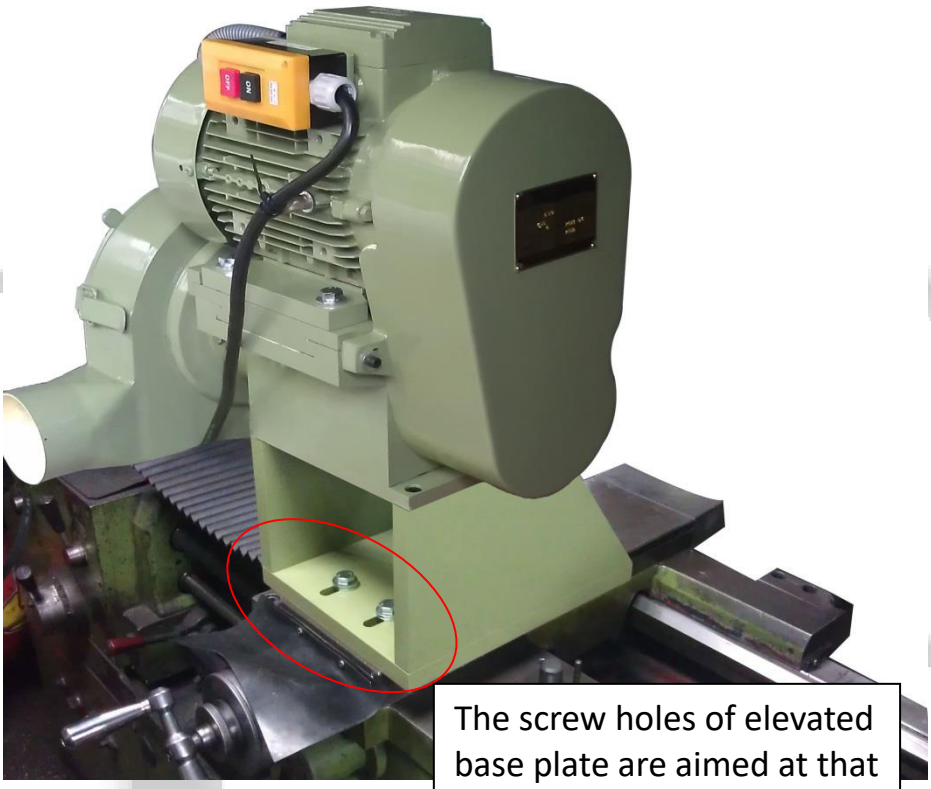

The screw holes of elevated base plate are aimed at that of the longitudinal feed, and the hex screws are used to fix (with spacers).



3. Using a dial indicator to check the level of grinding machine and lathe. The thimble of dial indicator is contacted to the front plane of spindle base on grinder, then move the transverse feed from left to right (or from right to left), and the check is completed if the thimble of dial indicator is not swinging.

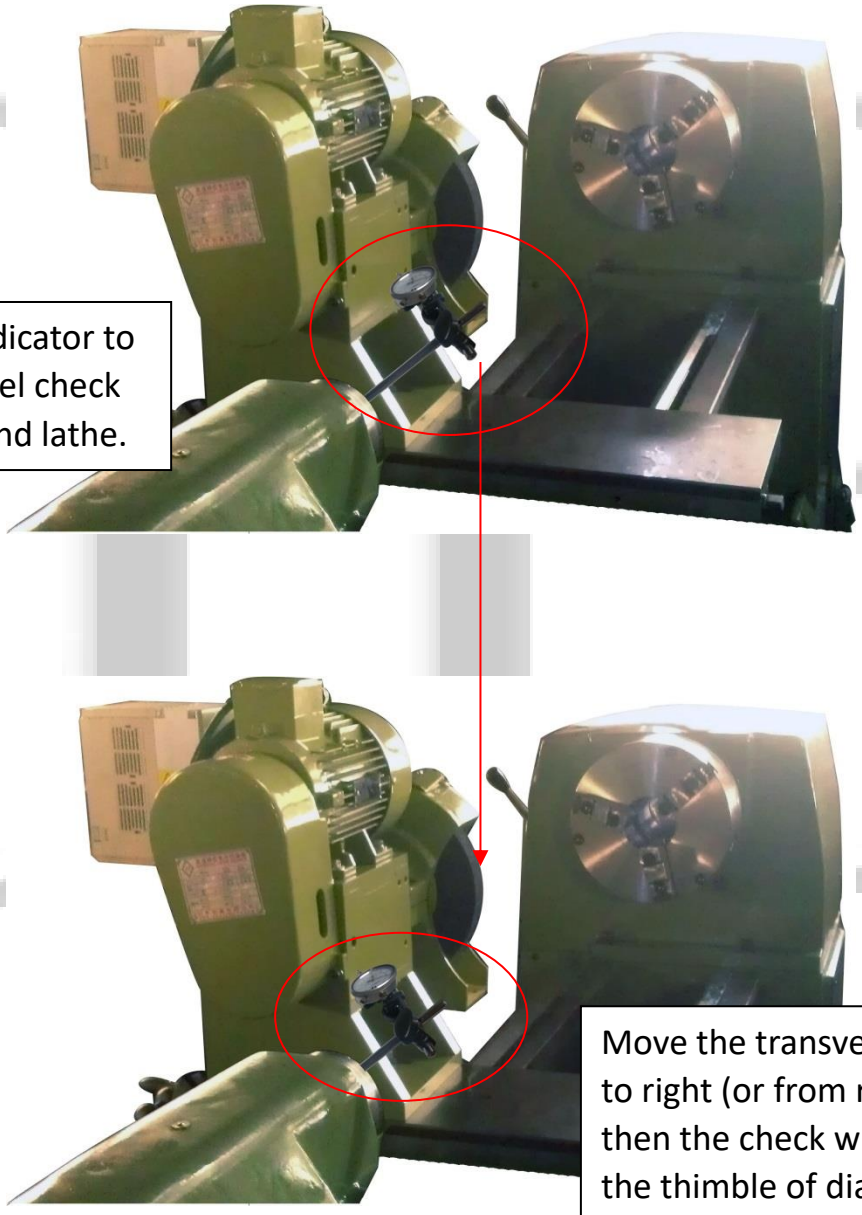

Use a dial indicator to make the level check for grinder and lathe.

Move the transverse feed from left to right (or from right to left), and then the check will be completed if the thimble of dial indicator is not swinging.

二、 Operation Notes

1. Connect the power cord to the three contacts of R.S.T in power terminal box, and confirm whether the voltage is consistent with the indicating voltage of grinder.



The voltage source should be AC-380V.

2. Connect the power cord of the grinder to the power source and connect the ground wire to the grounding position.

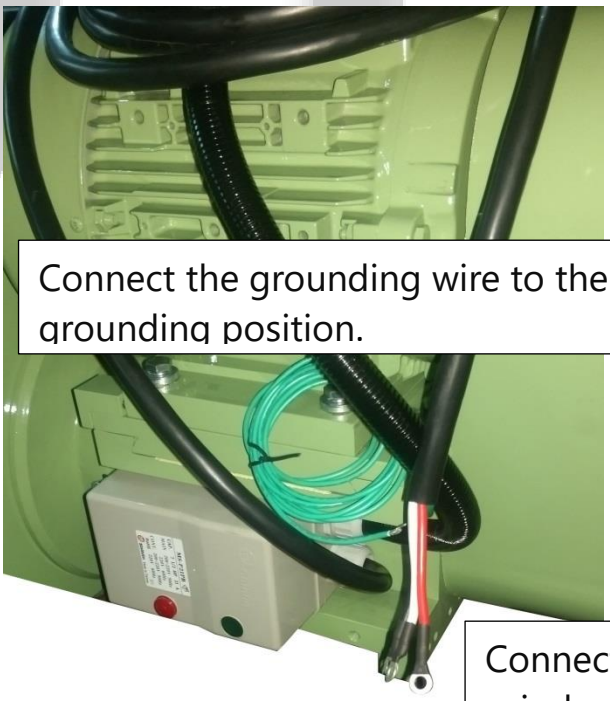

Connect the grounding wire to the grounding position.

Connect the power cord of the grinder to the power source.

3. Conduct a test run, and confirm whether the running direction of grinding wheel is consistent with the indicated direction of grinder. (If not, please change any two contacts of R.S.T)

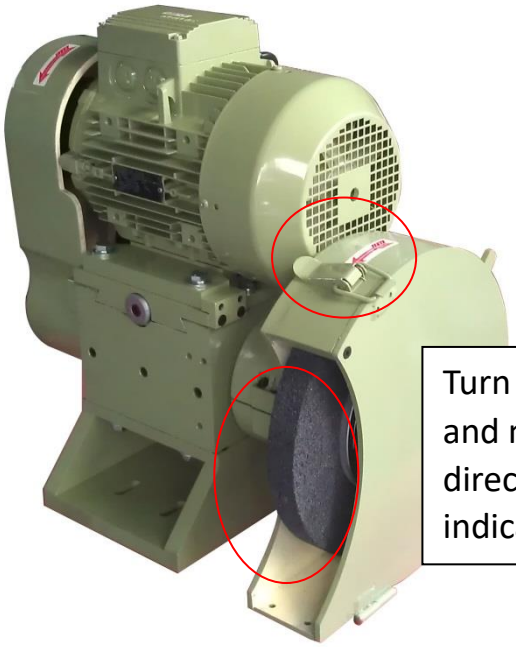

Turn on the power of grinder, and make sure the running direction is consistent with the indicated direction.

4. When grinding, the latch should rotate towards the same direction indicated by the grinder.

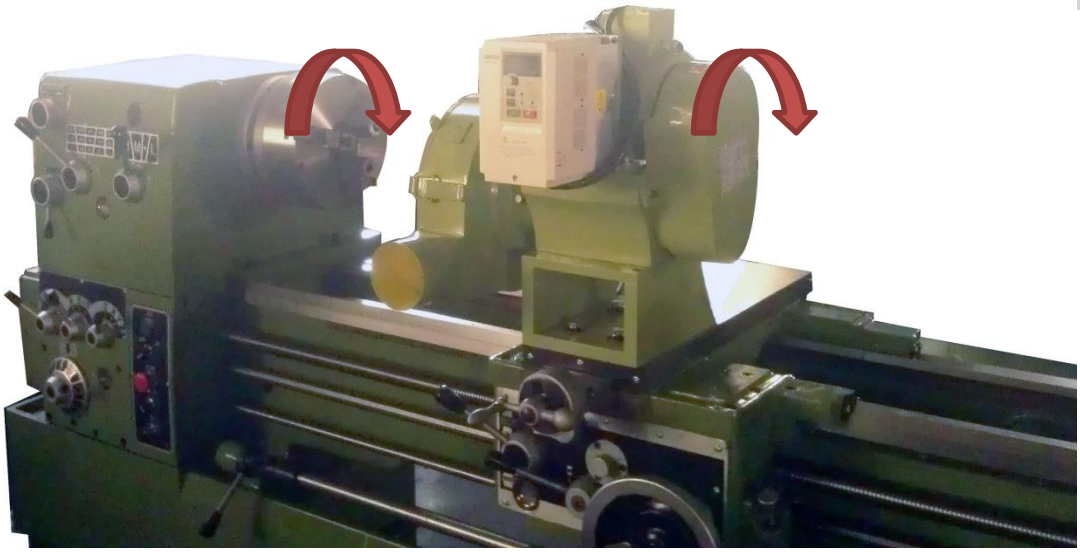

5. Use the compound rest vertical feeding, horizontal feeding and vertical feeding handwheels for grinding.



三、Changing the Grinding Wheel

1. Remove the screws in the security cover (suction cover) of grinding wheel, and open the clasps fixing the grinding wheel on the security outer cover (suction).

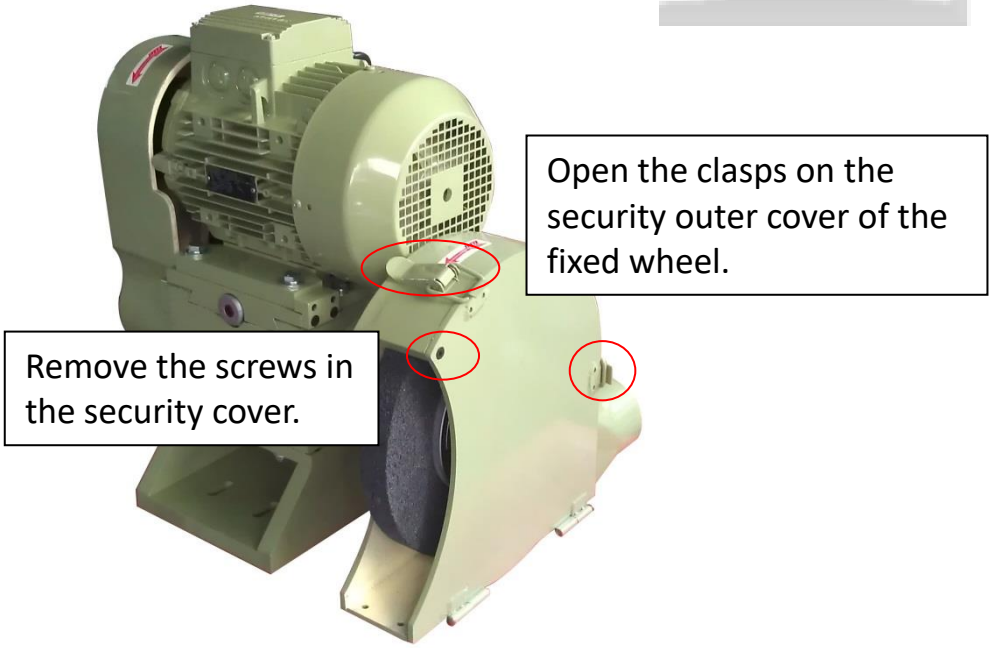

2. Use the bonus of hexagon keys to take down the screws of grinding wheel.



3. Use the bonus screw cap to remove the grinding wheel.

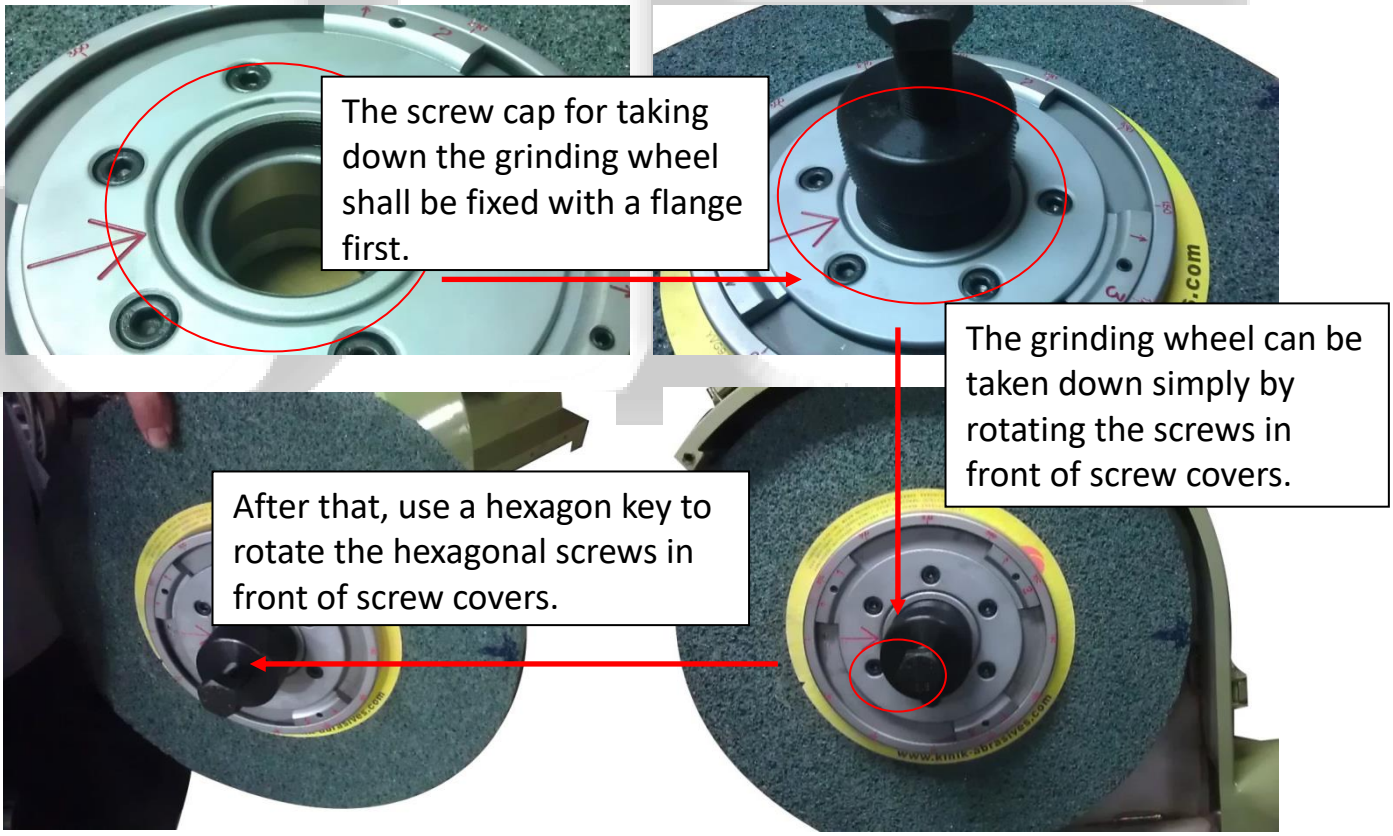

4. Install new grinding wheels. Target the grinding wheels at the marks, then install the screw cap to make the grinding wheel and the axis fix.

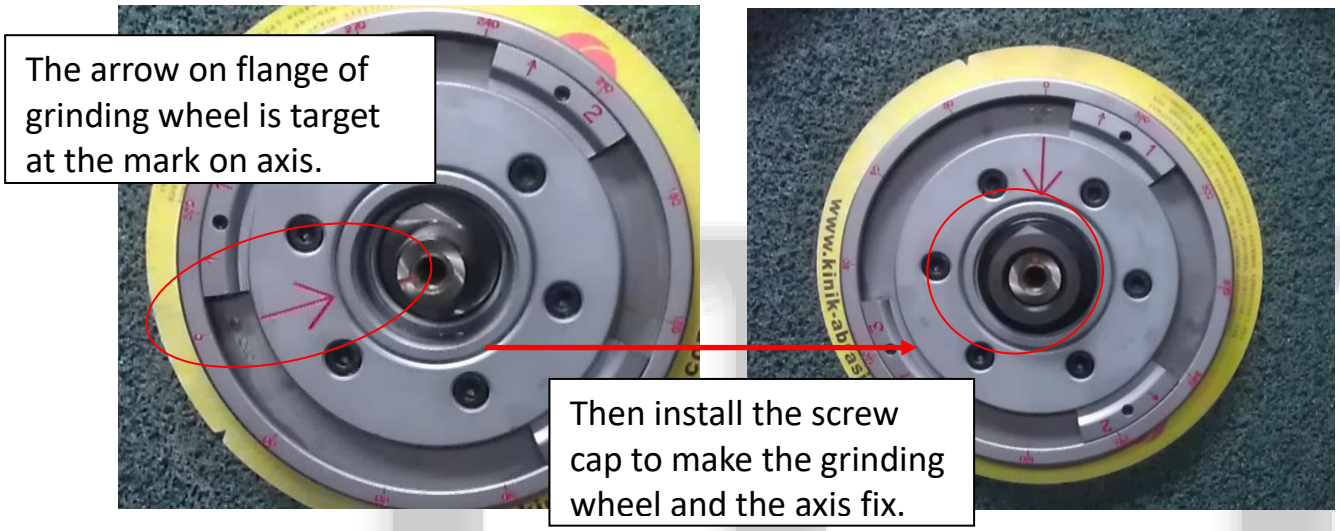

四、 Operating instructions for the grinding wheel dresser.

1. Secure the C-clamp onto the cylindrical object (such as the tail end of the workpiece, tailstock top pin, etc.), and use the diamond dresser for grinding wheel dressing.

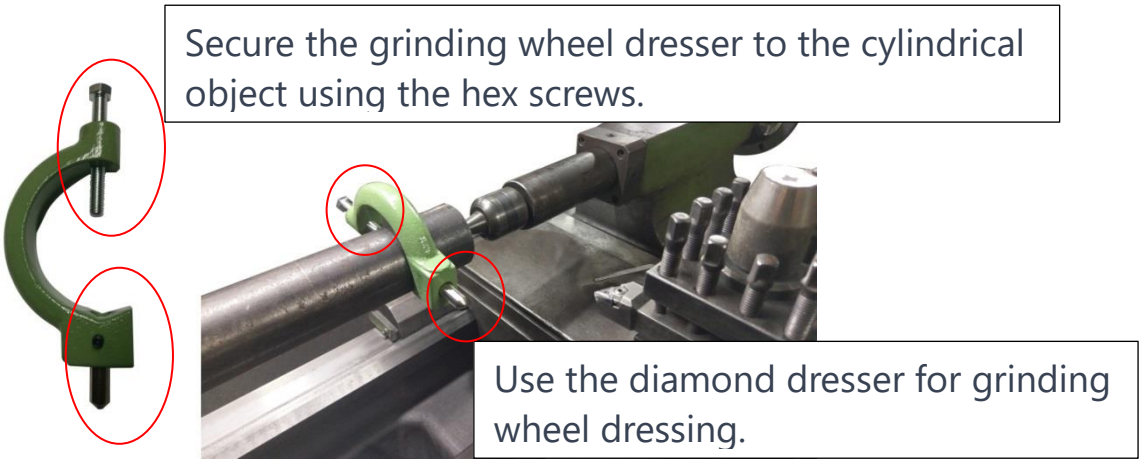

III. Safety Precautions

1. Personnel standing position

   When the grinder is in operation or in use, the personnel should never stand in front of the grinder, but on the back side or right back side.

2. Change grinding wheel – check the condition of grinding wheel

   When changing the grinding wheel, the operation personnel should firstly conduct sound test on the grinding wheel based on the following method. (1)Take the wood hammer or the handle of screwdriver as the tool. (2) Tap the surface of grinding wheel from the angle of 45 degrees or 135 degrees with the tool (Determine the 0 degree position yourself). (3) Listen to the sound of grinding wheel carefully. For V-based grinding wheel, the normal sound should be light metal sound. For B-based and Mg-based grinding wheel, it should be heavy sound. (4) For non-defective grinding wheel, the sound won't change when tapping on any position.

3. Change grinding wheel – install grinding wheel

   Before installing grinding wheel, it should (1) check the flange, core axis of grinding wheel, and the hole of grinding wheel (whether there are impurities, whether the flange support is leveling, and whether it is bending); (2) Install the fixed flange, grinding wheel, movable flange and nuts (screws) in order; (3) The nuts (screws) can't be locked too tightly, which should be in appropriate tightness (The force on the screws should be uniform). It is recommended using torque wrench.

4. When operating new grinding wheel for the first time, it should keep it in empty running for more than 3 minutes, so as to ensure normal working.

5. The applicable ranges for the grinding wheel are as follows:

- The 10"(255mm) wheel can only be used up to 7"(180mm).
- The 12"(305mm) wheel can only be used up to8"(205mm)..
- The 14"(355mm) wheel can only be used up to 9"(230mm).
- The 16"(405mm) wheel can only be used up to 10"(255mm).

*It is not recommended to use the wheel at its minimum range as it may pose a safety risk.